Adapters

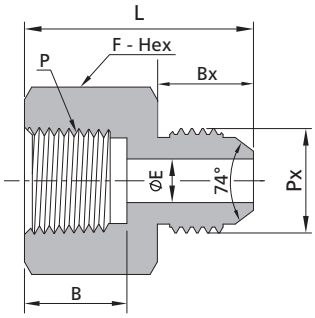

Female NPT Threads								Male JIC
P-NPT Size, in.	Px-JIC Size, in.	Ordering Number	Dimensions, in. (mm)					Working Pressure psig (bar)
			L	F	B	Bx	E	
1/8	1/4	SS-HPA-FNS2-JM4	1.09 (27.8)	0.63 (15.9)	0.41 (10.4)	0.55 (14.0)	0.17 (4.4)	15000 (1034)
1/4	1/4	SS-HPA-FNS4-JM4	1.37 (34.9)	0.94 (23.8)	0.59 (15.0)	0.55 (14.0)	0.17 (4.4)	15000 (1034)
1/4	3/8	SS-HPA-FNS4-JM6	1.32 (33.5)	0.94 (23.8)	0.59 (15.0)	0.56 (14.1)	0.23 (5.8)	15000 (1034)
3/8	3/8	SS-HPA-FNS6-JM6	1.37 (34.8)	1.13 (28.6)	0.59 (15.0)	0.56 (14.1)	0.23 (5.8)	15000 (1034)
3/8	1/2	SS-HPA-FNS6-JM8	1.47 (37.4)	1.13 (28.6)	0.59 (15.0)	0.66 (16.7)	0.31 (8.0)	15000 (1034)
1/2	1/2	SS-HPA-FNS8-JM8	1.72 (43.6)	1.37 (34.9)	0.78 (19.8)	0.66 (16.7)	0.31 (8.0)	15000 (1034)
1/2	5/8	SS-HPA-FNS8-JM10	1.82 (46.2)	1.37 (34.9)	0.78 (19.8)	0.76 (19.3)	0.41 (10.4)	15000 (1034)
1/2	3/4	SS-HPA-FNS8-JM12	1.92 (48.8)	1.37 (34.9)	0.78 (19.8)	0.86 (21.9)	0.46 (11.6)	15000 (1034)
3/4	3/4	SS-HPA-FNS12-JM12	1.89 (47.9)	1.50 (38.1)	0.81 (20.6)	0.86 (21.9)	0.61 (15.5)	10000 (690)
1	1	SS-HPA-FNS16-JM16	2.18 (55.3)	1.75 (44.5)	1.00 (25.4)	0.91 (23.1)	0.84 (21.4)	10000 (690)

Adapters ①

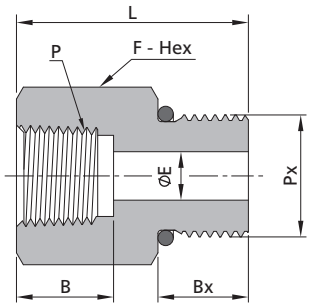

Female NPT Threads								Male SAE O-ring
P-NPT Size, in.	Px-SAE/MS Thread Size, in.	Ordering Number	Dimensions, in. (mm)					Working Pressure psig (bar)
			L	F	B	Bx	E	
1/4	7/16-20	SS-HPA-FNS4-SH7	1.20 (30.5)	0.75 (19.1)	0.59 (15.0)	0.43 (11.0)	0.18 (4.5)	10000 (690)
3/8	9/16-18	SS-HPA-FNS6-SH9	1.29 (32.7)	0.94 (23.8)	0.59 (15.0)	0.47 (12.0)	0.30 (7.5)	10000 (690)
1/2	3/4-16	SS-HPA-FNS8-SH12	1.61 (40.9)	1.19 (30.2)	0.78 (19.8)	0.55 (14.0)	0.39 (10.0)	10000 (690)
3/4	7/8-14	SS-HPA-FNS12-SH14	1.67 (42.5)	1.50 (38.1)	0.81 (20.6)	0.63 (16.0)	0.49 (12.5)	10000 (690)

① *Male SAE O-ring Ends are supplied with a Fluorocarbon FKM O-ring as standard, other materials of O-rings available.*